Published on *Hunter Industries* (http://www.hunterindustries.com)

Products: Freeze-Clik® [1]
Topics: Installation Procedures

The correct placement of the Freeze-Clik is critical for accurate temperature sensing. It must be mounted out of direct sunlight, and where free outdoor air circulation is possible. Examples would be the north wall of a building or under eaves and overhangs.

If the best location for temperature sensing is not a feasible location for mounting the Freeze-Clik, an alternate location may be chosen if, in addition, a “sun guard” is used (a piece of flashing, for example) to shade the Freeze-Clik during that time of day that the sun could hit it (see Figure 1).

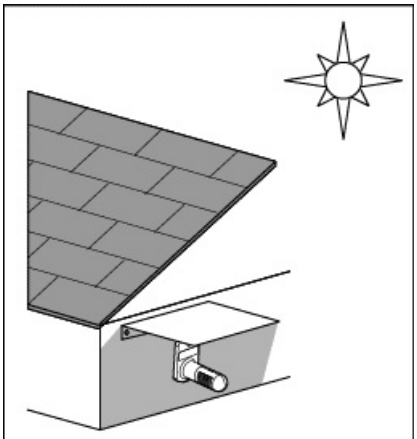

Figure 1

The Freeze-Clik housing is designed so that it provides the sensing element some amount of shaded protection from direct or indirect radiation, while allowing air to move freely around it. This feature, along with the best possible placement, will allow the Freeze-Clik freeze sensor to respond at the correct temperature.

The aluminum swivel bracket allows angling of the housing away from a thermal mass, such as an uninsulated masonry wall of a heated structure. The air along the outer inch or so can be a few degrees warmer than the actual outdoor air. To swivel the bracket, loosen the locknut first, then retighten.

Using the screws provided, attach the Freeze-Clik to the chosen surface. Run the extension wire to the controller. If an extension to the wire is needed, use wire no lighter than **20 AWG**.

Note: Both the standard Freeze-Clik and the Freeze-Clik-Rev (a “reverse” model where instead of switching system operation “off” at a set temperature point, the system is switched “on”) are installed and wired in the same manner.

Wiring

Hunter SRC Controller

The Freeze-Clik connects directly to the SRC. This allows you to easily override the sensor by using the RUN (BYPASS SENSOR) position on the dial.

1. Route the wires from the Freeze-Clik up through the same opening used for valve wiring.
2. Connect one wire to the RS terminal and other to the C terminal (See Figure 2).
3. Connect the valve common to the RS terminal.

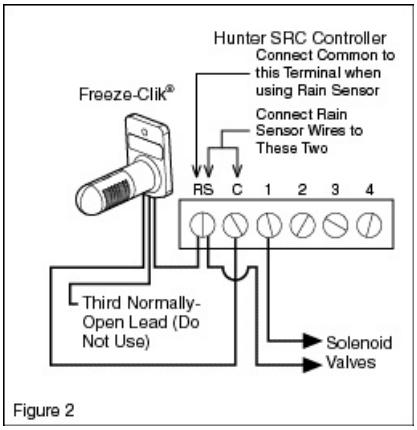

Figure 2

[2]

Hunter Pro-C, ICC and I-Core Controller

The Freeze-Clik connects directly to the Pro-C or ICC. This allows you to easily override the sensor by using the Sensor switch on the front panel.

1. Remove the jumper from the two “SEN” terminals.
2. Route the wires from the rain sensor up through the same conduit opening used for valve wiring.
3. Connect one wire to the terminal labeled “SEN” and the other wire to the other “SEN” terminal (See Figure 3).

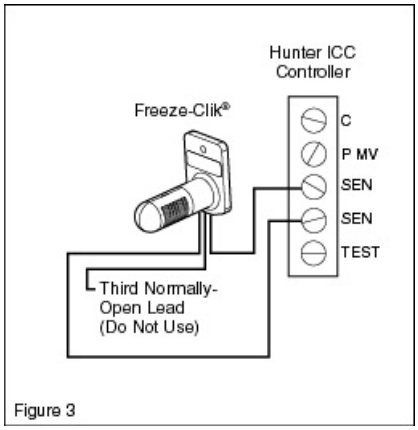

Figure 3

[3]

Additional Installation Procedures

(*non-Hunter controller)*

The Freeze-Clik freeze sensor is wired to the 24 VAC common ground circuit of the solenoid valves (as shown in Figure 4). Locate the common ground wire of the solenoid valves. If it is connected to the common terminal on the controller, disconnect it.

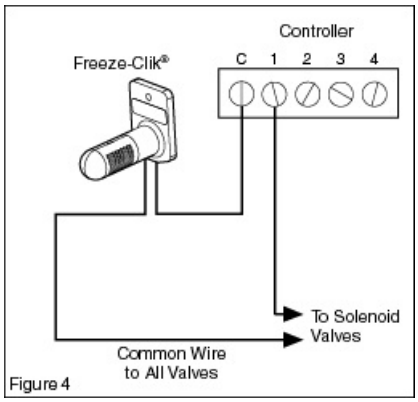

Figure 4

[4]

(multiple sensors)

Attach one lead of the Freeze-Clik to the common terminal on the controller and the other lead to the common ground wire of the solenoid valves.

If a Mini-Clik® Rain Sensor is already installed or is to be part of the installation (see Figure 5), the Freeze Sensor is to be wired in series with the Rain Sensor so that either (or both) devices can control the circuit.

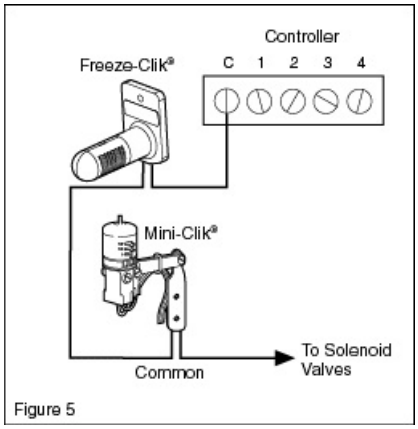

Figure 5

[5]

Operation

The Freeze-Clik is preset and is not adjustable. It will break the common ground circuit, there by keeping the sprinkler system from operating at, or below, 3ºC (37ºF). At temperatures above 3ºC, it will close the circuit for normal sprinkler operation.

For Freeze-Clik-Rev Model: The temperature setting works in reverse on this model with the circuit not allowing operation of the sprinkler system above 3ºC (37ºF). Once the temperature reaches this point or goes below, it will activate the system and commence watering for whatever amount of time you have set on your controller.

Note: the factory tolerance for the setpoint on both the standard Freeze-Clik and the Freeze-Clik-Rev models is ± 2ºC, therefore your particular unit will switch at a temperature in this range.

Special Usage Note: For landscape applications only. Not for crop protection. A freeze sensor should only be used as part of a

sound irrigation management program, including regular system visual checks.

Bypassing the Freeze-Clik

The Hunter XC, XCore, ICC, I-Core and Pro-C controllers are equipped with a built-in bypass that allows you to override an active sensor. For controllers not equipped with this feature, should you desire to bypass the operation of the Freeze-Clik for any reason (i.e., turn on your system even though the Freeze-Clik has shut “off” due to low temperature), there are two simple ways to do this. The first is to add our Bypass Switch Box which mounts on, or next to, the controller. By simply moving the switch, the Freeze-Clik is bypassed.

Resources

[6]
FREEZE-CLIK INSTALLATION CARD
[6]

Rate this Article:

No votes yet

Related Links

Source URL (retrieved on *01/09/2014 - 16:53*): http://www.hunterindustries.com/en-metric/support/freeze-clik-installation-instructions

Links:
[1] http://www.hunterindustries.com/en-metric/irrigation-product/sensors/freeze-clikr
[2] http://www.hunterindustries.com/sites/default/files/ts_freezeclik_fig2.gif
[3] http://www.hunterindustries.com/sites/default/files/ts_freezeclik_fig3.gif
[4] http://www.hunterindustries.com/sites/default/files/ts_freezeclik_fig4.gif
[5] http://www.hunterindustries.com/sites/default/files/ts_freezeclik_fig5.gif
[6] http://www.hunterindustries.com/sites/default/files/t_IC_Freezeclik_dom.jpg
[7] http://www.hunterindustries.com/en-metric/global